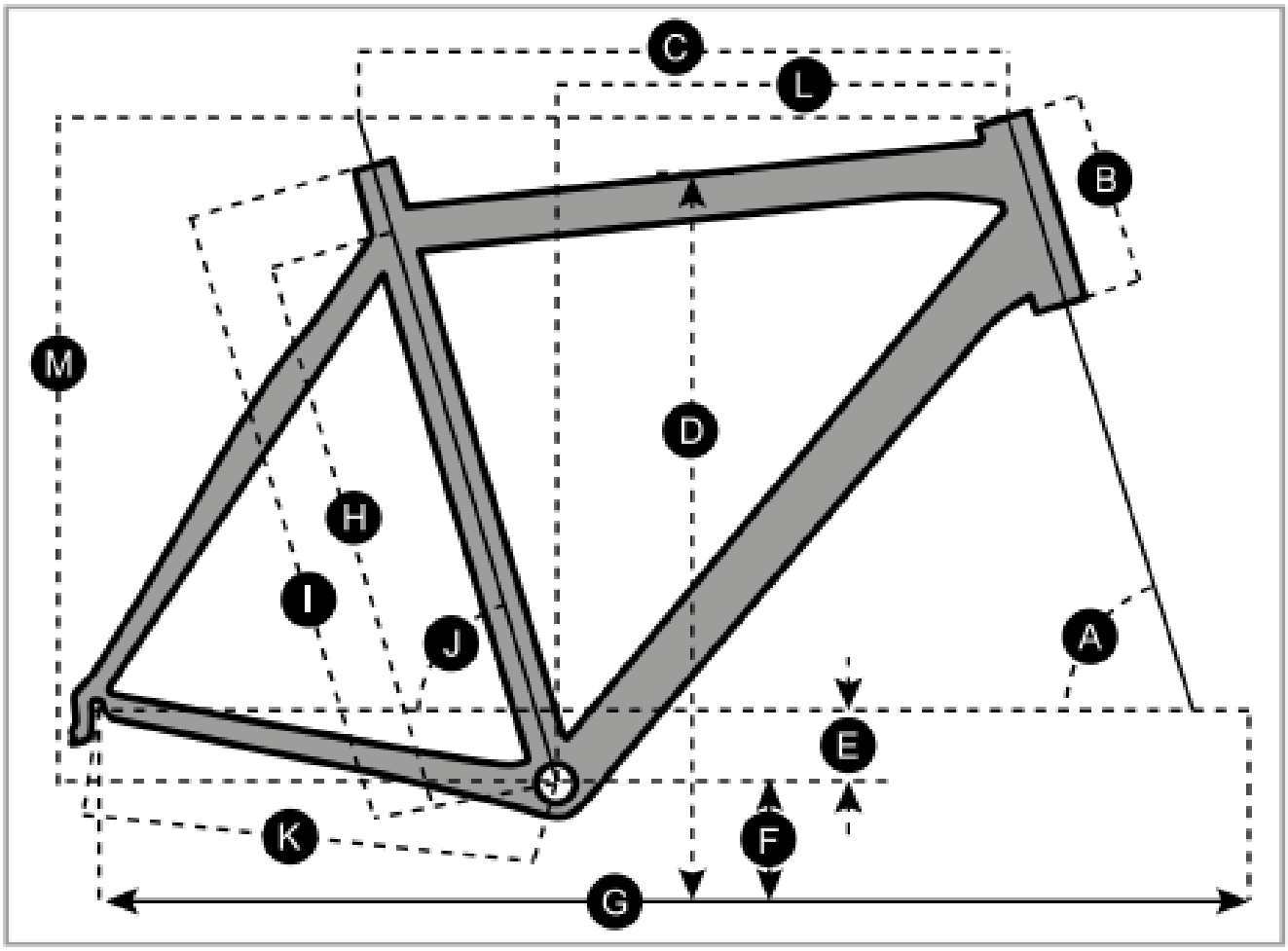

SPEEDSTER GRAVEL

SPEEDSTER GRAVEL: 10, 20, 30

		XXS/47		XS/49		S/52		M/54		L/56		XL/58		XXL/61	
A	HEAD TUBE ANGLE	70.5 °		71.0 °		72.0 °		72.5 °		73.0 °		73.3 °		73.3 °	
B	HEAD TUBE LENGTH	111.0 mm	4.4 in	121.0 mm	4.8 in	141.0 mm	5.6 in	161.0 mm	6.3 in	181.0 mm	7.1 in	201.0 mm	7.9 in	221.0 mm	8.7 in
C	TOP TUBE HORIZONTAL	505.0 mm	19.9 in	515.0 mm	20.3 in	530.0 mm	20.9 in	545.0 mm	21.5 in	560.0 mm	22.0 in	575.0 mm	22.6 in	590.0 mm	23.2 in
D	STANDOVER HEIGHT	725.3 mm	28.6 in	741.1 mm	29.2 in	767.5 mm	30.2 in	787.5 mm	31.0 in	807.5 mm	31.8 in	827.1 mm	32.6 in	851.4 mm	33.5 in
E	BB OFFSET	-67.0 mm	-2.6 in	-67.0 mm	-2.6 in	-67.0 mm	-2.6 in	-67.0 mm	-2.6 in	-67.0 mm	-2.6 in	-67.0 mm	-2.6 in	-67.0 mm	-2.6 in
F	BB HEIGHT	282.0 mm	11.1 in	282.0 mm	11.1 in	282.0 mm	11.1 in	282.0 mm	11.1 in	282.0 mm	11.1 in	282.0 mm	11.1 in	282.0 mm	11.1 in
G	WHEEL BASE	973.1 mm	38.3 in	979.4 mm	38.6 in	981.2 mm	38.6 in	986.8 mm	38.9 in	991.6 mm	39.0 in	999.0 mm	39.3 in	1'012.7 mm	39.9 in
H	BB CENTER TO TOPTUBE CENTER	410.0 mm	16.1 in	430.0 mm	16.9 in	460.0 mm	18.1 in	480.0 mm	18.9 in	500.0 mm	19.7 in	520.0 mm	20.5 in	550.0 mm	21.7 in
I	BB CENTER TO TOP OF SEATTUBE	470.0 mm	18.5 in	490.0 mm	19.3 in	520.0 mm	20.5 in	540.0 mm	21.3 in	560.0 mm	22.0 in	580.0 mm	22.8 in	610.0 mm	24.0 in
J	SEAT ANGLE	75.0 °		75.0 °		74.5 °		74.0 °		73.5 °		73.1 °		73.0 °	
K	CHAINSTAY	422.0 mm	16.6 in	422.0 mm	16.6 in	422.0 mm	16.6 in	422.0 mm	16.6 in	422.0 mm	16.6 in	422.0 mm	16.6 in	422.0 mm	16.6 in
L	REACH	366.6 mm	14.4 in	373.5 mm	14.7 in	377.3 mm	14.9 in	381.2 mm	15.0 in	384.6 mm	15.1 in	389.0 mm	15.3 in	397.0 mm	15.6 in
M	STACK	516.7 mm	20.3 in	527.9 mm	20.8 in	550.5 mm	21.7 in	571.3 mm	22.5 in	592.3 mm	23.3 in	612.5 mm	24.1 in	613.6 mm	24.2 in
N	STEM LENGTH														